MCT
MOS CONTROLLED THYRISTOR

MCT-3600V-S

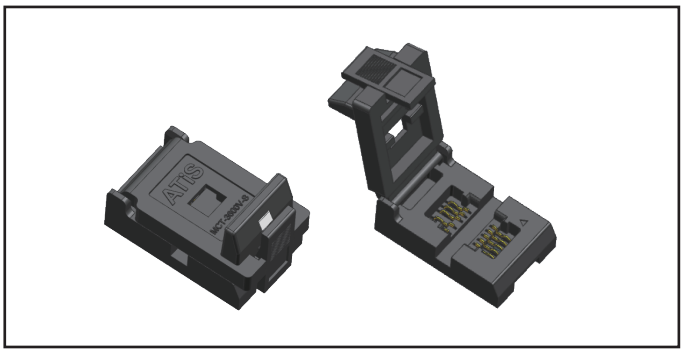

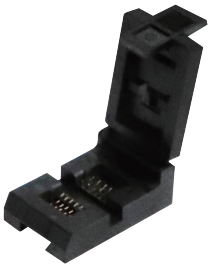

- 材质/Material
  主体/Body: PPS+gf30 (Black)
  接触/Contact: BeCu
  镀覆/Plating: Au plating (Ni-base)

- 电特性/Electrical Characteristics
  额定电流/Rated Current: 1A
  绝缘电阻/Insulation Resistance: 1000mΩ min. at 500V DC
  接触电阻/Contact Resistance: 100mΩ max. at 100mA max

- 其他/Others
  使用温度/Operating Temperature Range: -55℃~+175℃
  抗疲劳/Anti-Fatigue: 50000 cycle (因测试条件不同结果可能不同/Results may vary depending on test conditions)

产品尺寸/Product Dimensions: (长宽高/LWH, 关键封装尺寸/Critical Package Sizes, 引脚尺寸/Pin Size)

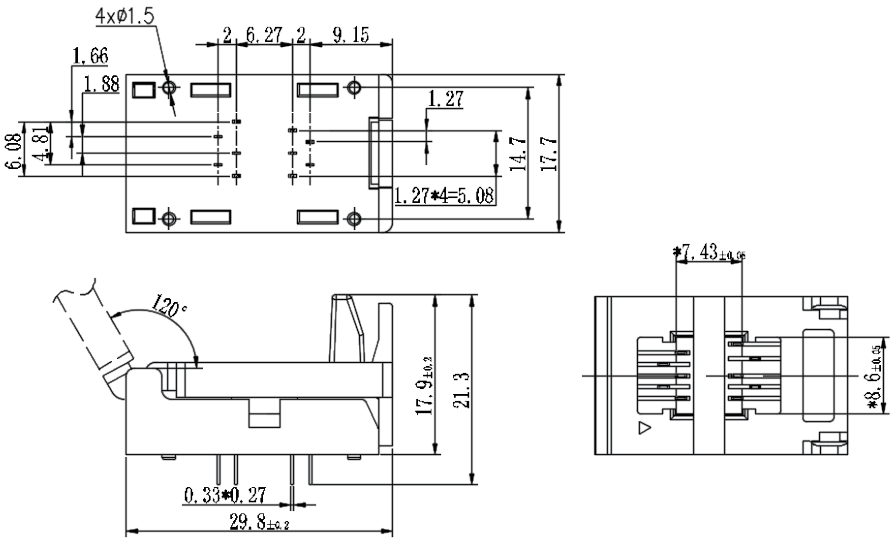
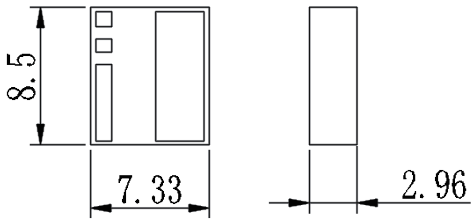
器件封装要求含/Device Packaging Requirements Including